ACDEJ

OM-00618-OE04
April 4, 1980
Rev. A

10 SERIES™

INSTALLATION, OPERATION, PARTS LIST, AND MAINTENANCE MANUAL

MODEL

13A2-AENLD

THE GORMAN-RUPP COMPANY • MANSFIELD, OHIO
GORMAN-RUPP OF CANADA LIMITED • ST. THOMAS, ONTARIO, CANADA
Printed in U.S.A.

© Copyright by the Gorman-Rupp Company 1985

The engine exhaust from this product contains chemicals known to the State of California to cause cancer, birth defects or other reproductive harm.

TABLE OF CONTENTS

INTRODUCTION I-1

WARNINGS - SECTION A A-1

INSTALLATION - SECTION B B-1
Pump Dimensions B-1
PREINSTALLATION INSPECTION B-2
POSITIONING PUMP B-2
Lifting B-2
Mounting B-2
Clearance B-3
SUCTION AND DISCHARGE PIPING B-3
Materials B-3
Line Configuration B-3
Connections to Pump B-3
Gauges B-4
SUCTION LINES B-4
Fittings B-4
Strainers B-4
Sealing B-4
Suction Lines In Sumps B-5
Suction Line Positioning B-5
DISCHARGE LINES B-6
Siphoning B-6
Valves B-6
Bypass Lines B-7

OPERATION - SECTION C C-1
PRIMING C-1
STARTING C-2
OPERATION C-2
Lines With a Bypass C-2
Lines Without a Bypass C-2
Leakage C-2
Liquid Temperature And Overheating C-3
Strainer Check C-3
Pump Vacuum Check C-3
STOPPING C-4
Cold Weather Preservation C-4

PUMP TROUBLESHOOTING - SECTION D D-1

PUMP MAINTENANCE AND REPAIR - SECTION E E-1
PERFORMANCE CURVE E-1
PUMP MODEL - PARTS LIST E-3
PUMP MODEL - PARTS LIST E-5
PUMP AND SEAL DISASSEMBLY AND REASSEMBLY E-6
Suction Check Valve Removal And Disassembly E-6
Back Cover Removal E-6
Pump Disassembly E-7
Seal Removal E-7
Seal Installation E-7
Pump Reassembly E-10
Back Cover Installation E-11
Suction Check Valve Reassembly And Installation E-11
LUBRICATION E-11
Seal Assembly E-11
Engine E-12

INTRODUCTION

This Installation, Operation, and Maintenance Manual is designed to help you achieve the best performance and longest life from your Gorman-Rupp pump.

This pump is a 10 Series, semi-open impeller, self-priming centrifugal model with a suction check valve. The pump is powered by a single-cylinder Wisconsin AENLD gasoline engine, and is designed to handle most non-volatile, non-flammable liquids containing specified entrained solids. The basic material of construction for wetted parts is gray iron, with ductile iron impeller and steel wearing parts.

If there are any questions regarding the pump or its application which are not covered in this manual or in other literature accompanying this unit, please contact your Gorman-Rupp distributor, or write:

The Gorman-Rupp Company
P.O. Box 1217
Mansfield, Ohio 44901-1217

or

Gorman-Rupp of Canada Limited
70 Burwell Road
St. Thomas, Ontario N5P 3R7

For information or technical assistance on the engine, contact the engine manufacturer's local dealer or representative.

The following are used to alert maintenance personnel to procedures which require special attention, to those which could damage equipment, and to those which could be dangerous to personnel:

NOTE

Instructions to aid in installation, operation, and maintenance or which clarify a procedure.

CAUTION

Instructions which must be followed to avoid causing damage to the product or other equipment incidental to the installation. These instructions describe the requirements and the possible damage which could result from failure to follow the procedures.

WARNING

These instructions must be followed to avoid causing injury or death to personnel, and describe the procedure required and the injury which could result from failure to follow the procedure.

WARNINGS - SECTION A

THESE WARNINGS APPLY TO 10 SERIES ENGINE DRIVEN PUMPS. REFER TO THE MANUAL ACCOMPANYING THE ENGINE BEFORE ATTEMPTING TO BEGIN OPERATION.

WARNING

Before attempting to open or service the pump:

1. Familiarize yourself with this manual.
2. Disconnect the spark plug wire or take other action to ensure that the pump will remain inoperative.
3. Allow the pump to cool if overheated.
4. Vent the pump slowly and cautiously.
5. Close the suction and discharge valves.
6. Check the temperature before opening any covers, plates, or plugs.
7. Drain the pump.

WARNING

This pump is designed to handle most non-volatile, non-flammable liquids containing specified entrained solids. Do not attempt to pump volatile, flammable or corrosive liquids which may damage the pump or endanger personnel as a result of pump failure.

WARNING

After the pump is installed, make certain that all pipe or hose connections are tight and properly supported, and that the entire unit is secure before operation.

WARNING

Do not operate the pump against a closed discharge valve for long periods of time. This could bring the liquid to a boil, build pressure, and cause the pump to rupture or explode.

WARNING

Do not remove plates, covers, gauges, pipe plugs, or fittings from an overheated pump. Vapor pressure within the pump can cause parts being disengaged to be ejected with great force. Allow the pump to cool before servicing.

WARNING

Fuel used by internal combustion engines presents an extreme explosion and fire hazard. Make certain that all fuel lines are securely connected and free of leaks. Never refuel a hot or running engine. Avoid overfilling the fuel tank. Always use the correct type of fuel.

WARNING

Do not operate an internal combustion engine in an explosive atmosphere. When operating internal combustion engines in an enclosed area, make certain that exhaust fumes are piped to the outside. These fumes contain carbon monoxide, a deadly gas that is colorless, tasteless, and odorless.

WARNING

Never tamper with the governor to gain more power. The governor establishes safe operating limits that should not be exceeded. Limit the maximum continuous performance to 2600 RPM.

INSTALLATION - SECTION B

Since pump installations are seldom identical, this section offers only general recommendations and practices required to inspect, position, and arrange the pump and piping.

Most of the information pertains to a standard **static lift application** where the pump is positioned above the free level of liquid to be pumped.

If installed in a **flooded suction application** where the liquid is supplied to the pump under pressure, some of the information such as mounting, line configuration, and priming must be tailored to the specific application. Since the pressure supplied to the pump is critical to performance and safety, **be sure** to limit the incoming pressure to 50% of the maximum permissible operating pressure as shown on the pump performance curve. (See Section E, Page 1). If the pump is fitted with a Gorman-Rupp double grease lubricated seal, the maximum incoming pressure must be reduced to 10 p.s.i..

For further assistance, contact your Gorman-Rupp distributor or the Gorman-Rupp Company.

Pump Dimensions

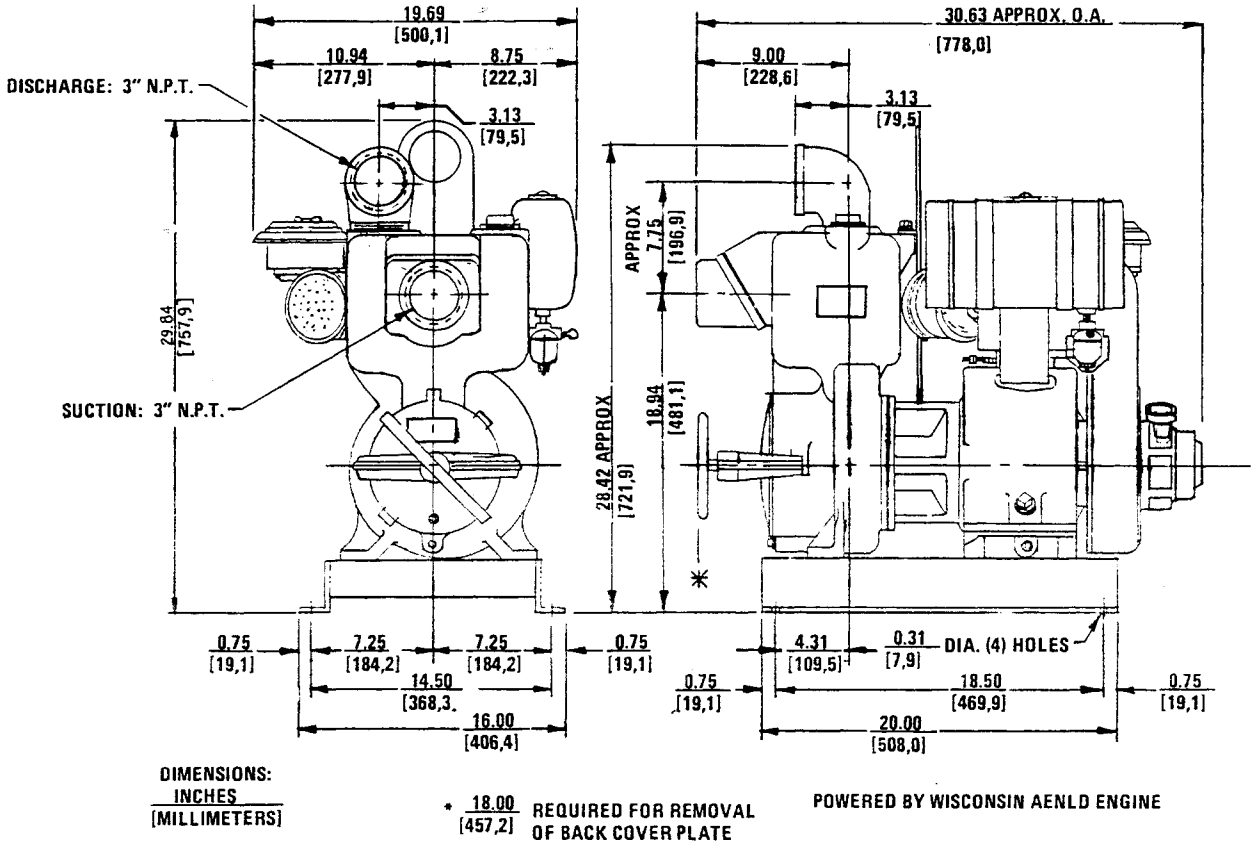

Figure 1. Pump Model 13A2-AENLD

PREINSTALLATION INSPECTION

The pump assembly was inspected and tested before shipment from the factory. Before installation, inspect the pump for damage which may have occurred during shipment. Check as follows:

a. Inspect the pump for cracks, dents, damaged threads, and other obvious damage.

b. Check for and tighten loose attaching hardware. Since gaskets tend to shrink after drying, check for loose hardware at mating surfaces.

c. Carefully read all tags, decals, and markings on the pump assembly, and follow the instructions indicated.

d. Check all lubricant levels and lubricate as necessary. Refer to LUBRICATION in the MAINTENANCE AND REPAIR section of this manual and perform duties as instructed.

e. If the pump and engine have been stored for more than 12 months, some of the components or lubricants may have exceeded their maximum shelf life. These **must be inspected or replaced** to ensure maximum pump service.

If the maximum shelf life on any item has been exceeded, or if anything appears to be abnormal, contact your Gorman-Rupp distributor or the factory to determine the repair or updating policy. **Do not** put the pump into service until appropriate action has been taken.

POSITIONING PUMP

Lifting

Use lifting equipment with a capacity of at least **1,425 pounds**. This pump weighs approximately **285 pounds**, not including the weight of accessories and wheel kit. Customer installed equipment such as suction and discharge hoses **must** be removed before attempting to lift.

CAUTION

The pump assembly can be seriously damaged if the cables or chains used to lift and move the unit are improperly wrapped around the pump.

Mounting

Locate the pump in an accessible place as close as practical to the liquid being pumped. Level mounting is essential for proper operation. The pump may have to

be supported or shimmed to provide for level operation or to eliminate vibration.

To ensure sufficient lubrication and fuel supply to the engine, **do not** position the pump and engine more than 15° off horizontal for continuous operation. The pump and engine may be positioned up to 30° off horizontal for **intermittent operation only**; however, the engine manufacturer should be consulted for continuous operation at angles greater than 15°.

Clearance

A minimum clearance of **18 inches** in front of the cover plate is required to permit removal of the cover and easy access to the pump interior.

SUCTION AND DISCHARGE PIPING

Pump performance is adversely effected by increased suction lift, discharge elevation, and friction losses. See the performance curve and governor setting information on Page E-1 to be sure your overall application allows pump to operate within the safe operation range.

Materials

Either pipe or hose may be used for suction and discharge lines; however, the materials must be compatible with the liquid being pumped. If hose is used in suction lines, it must be the rigid-wall, reinforced type to prevent collapse under suction. Using piping couplings in suction lines is not recommended.

Line Configuration

Keep suction and discharge lines as straight as possible to minimize friction losses. Make minimum use of elbows and fittings, which substantially increase friction loss. If elbows are necessary, use the long-radius type to minimize friction loss.

Connections to Pump

Before tightening a connecting flange, align it exactly with the pump port. Never pull a pipe line into place by tightening the flange bolts and/or couplings.

Lines near the pump must be independently supported to avoid strain on the pump which could cause excessive vibration, decreased bearing life, and increased shaft and seal wear. If hose-type lines are used, they should have adequate support to secure them when filled with liquid and under pressure.

Gauges

Most pumps are drilled and tapped for installing discharge pressure and vacuum suction gauges. If these gauges are desired for pumps that are not tapped, drill and tap the suction and discharge lines not less than 18 inches from the suction and discharge ports and install the lines. Installation closer to the pump may result in erratic readings.

SUCTION LINES

To avoid air pockets which could affect pump priming, the suction line must be as short and direct as possible. When operation involves a suction lift, the line must always slope upward to the pump from the source of the liquid being pumped; if the line slopes down to the pump at any point along the suction run, air pockets will be created.

Fittings

Suction lines should be the same size as the pump inlet. If reducers are used in suction lines, they should be the eccentric type, and should be installed with the flat part of the reducers uppermost to avoid creating air pockets. Valves are not normally used in suction lines, but if a valve is used, install it with the stem horizontal to avoid air pockets.

Strainers

If a strainer is furnished with the pump, be certain to use it; any spherical solids which pass through a strainer furnished with the pump will also pass through the pump itself.

If a strainer is not furnished with the pump, but is installed by the pump user, make certain that the total area of the openings in the strainer is at least three or four times the cross section of the suction line, and that the openings will not permit passage of solids larger than the solids handling capability of the pump.

This pump is designed to handle up to 1-1/2 inch diameter spherical solids.

Sealing

Since even a slight leak will affect priming, head, and capacity, especially when operating with a high suction lift, all connections in the suction line should be sealed with pipe dope to ensure an airtight seal. Follow the sealant manufacturer's recommendations when selecting and applying the pipe dope. The pipe dope should be compatible with the liquid being pumped.

Suction Lines In Sumps

If a single suction line is installed in a sump, it should be positioned away from the wall of the sump at a distance equal to one and one-half times the diameter of the suction line.

If there is a liquid flow from an open pipe into the sump, the flow should be kept away from the suction inlet because the inflow will carry air down into the sump, and air entering the suction line will reduce pump efficiency.

If it is necessary to position inflow close to the suction inlet, install a baffle between the inflow and the suction inlet at a distance one and one-half times the diameter of the suction pipe. The baffle will allow entrained air to escape from the liquid before it is drawn into the suction inlet.

If two suction lines are installed in a single sump, the flow paths may interact, reducing the efficiency of one or both pumps. To avoid this, position the suction inlets so that they are separated by a distance equal to at least three times the diameter of the suction pipe.

Suction Line Positioning

The depth of submergence of the suction line is critical to efficient pump operation. Figure 2 shows recommended minimum submergence vs. velocity.

NOTE

The pipe submergence required may be reduced by installing a standard pipe increaser fitting at the end of the suction line. The larger opening size will reduce the inlet velocity. Calculate the required submergence using the following formula based on the increased opening size (area or diameter).

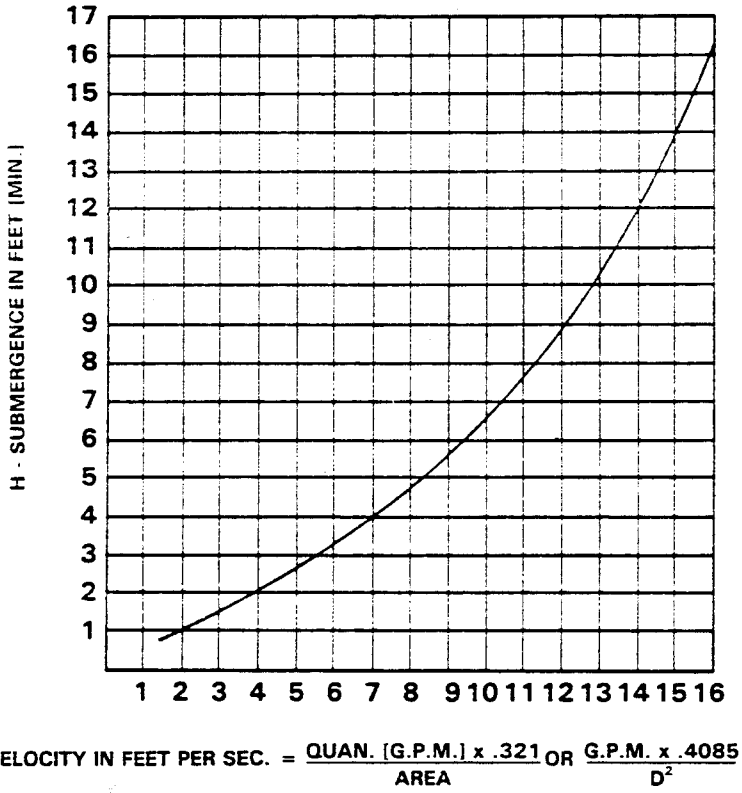

Figure 2. Recommended Minimum Suction Line Submergence Vs. Velocity

DISCHARGE LINES

Siphoning

Do not terminate the discharge line at a level lower than that of the liquid being pumped unless a siphon breaker is used in the line. Otherwise, a siphoning action causing damage to the pump could result.

Valves

A check valve in the discharge line is normally recommended, but it is not necessary in low discharge head appl. ations.

If a throttling valve is desired in the discharge line, use a valve as large as the largest pipe to minimize friction losses. Never install a throttling valve in a suction line.

With high discharge heads, it is recommended that a throttling valve and a system check valve be installed in the discharge line to protect the pump from excessive shock pressure and reverse rotation when it is stopped.

CAUTION

If application involves a high discharge head, gradually close the discharge throttling valve before stopping the pump.

Bypass Lines

If it is necessary to permit the escape of air to atmosphere during initial priming or in the repriming cycle, install a bypass line between the pump and the discharge check valve. The bypass line should be sized so that it does not affect pump discharge capacity.

Either a Gorman-Rupp automatic air release valve - which will automatically open to allow the pump to prime, and automatically close when priming is accomplished - or a hand-operated shutoff valve should be installed in the bypass line.

NOTE

The bypass line may clog frequently, particularly if the valve remains closed. If this condition occurs, either use a larger bypass line or leave the shutoff valve open during the pumping operation.

Do not terminate the discharge line at a level lower than that of the liquid being pumped unless a siphon breaker is used in the line. Otherwise, a siphoning action could result, causing damage to the pump.

OPERATION - SECTION C

WARNING

This pump is designed to handle most non-volatile, non-flammable liquids containing specified entrained solids. Do not attempt to pump volatile, flammable or corrosive liquids which may damage the pump or endanger personnel as a result of pump failure.

PRIMING

Install the pump piping as described in **INSTALLATION**. Make sure that the piping connections are tight, and that the pump is securely mounted. Check that the pump is properly lubricated (see **LUBRICATION** in **MAINTENANCE AND REPAIR**).

This pump is self-priming, but the pump should never be operated unless there is liquid in the pump casing.

CAUTION

Never operate a self-priming pump unless there is liquid in the pump casing. The pump will not prime when dry. Extended operation of a dry pump will destroy the seal assembly.

Add liquid to the casing when:

1. The pump is being put into service for the first time.
2. The pump has not been used for a considerable length of time.
3. The liquid in the casing has evaporated.

Once the pump casing has been filled, the pump will prime and reprime as necessary.

WARNING

After filling the casing, reinstall and tighten the fill plug. Do not attempt to operate the pump unless all connecting piping is securely installed. Otherwise, liquid in the pump forced out under pressure could cause injury to personnel.

To fill the pump, remove the pump casing fill cover or fill plug at the top of the casing and add clean liquid until the pump is filled. Replace the fill cover or fill plug before operating the pump.

STARTING

Consult the operations manual furnished with the engine.

OPERATION

Lines With a Bypass

Either a Gorman-Rupp automatic air release valve or a hand operated shutoff valve may be installed in a bypass line.

If a Gorman-Rupp automatic air release valve has been installed, close the throttling valve in the discharge line. The Gorman-Rupp valve will automatically open to allow the pump to prime, and automatically close when priming has been accomplished. After the pump has been primed, and liquid is flowing steadily from the bypass line, open the discharge throttling valve.

If a hand operated shutoff valve has been installed, close the throttling valve in the discharge line, and open the bypass shutoff valve so that the pump will not have to prime against the weight of the liquid in the discharge line. When the pump has been primed, and liquid is flowing steadily from the bypass line, close the bypass shutoff valve and open the discharge throttling valve.

Lines Without a Bypass

Open all valves in the discharge line and start the power source. Priming is indicated by a positive reading on the discharge pressure gauge or by a quieter operation. The pump may not prime immediately because the suction line must first fill with liquid. If the pump fails to prime within five minutes, stop it and check the suction line for leaks.

After the pump has been primed, partially close the discharge line throttling valve in order to fill the line slowly and guard against excessive shock pressure which could damage pipe ends, gaskets, sprinkler heads, and any other fixtures connected to the line. When the discharge line is completely filled, adjust the throttling valve to the required flow rate.

Leakage

No leakage should be visible at pump mating surfaces, or at pump connections or fittings. Keep all line connections and fittings tight to maintain maximum pump efficiency.

Liquid Temperature And Overheating

The **maximum** liquid temperature for this pump is 110°F. Do not apply it at a higher operating temperature.

Overheating can occur if operated with the valves in the suction or discharge lines closed. Operating against closed valves could bring the liquid to a boil, build pressure, and cause the pump to rupture or explode. If overheating occurs, stop the pump and allow it to cool before servicing it. Refill the casing with cool liquid.

WARNING

Do not remove plates, covers, gauges, pipe plugs, or fittings from an overheated pump. Vapor pressure within the pump can cause parts being disengaged to be ejected with great force. Allow the pump to cool before servicing.

Strainer Check

If a suction strainer has been shipped with the pump or installed by the user, check the strainer regularly, and clean it as necessary. The strainer should also be checked if pump flow rate begins to drop. If a vacuum suction gauge has been installed, monitor and record the readings regularly to detect strainer blockage.

Never introduce air or steam pressure into the pump casing or piping to remove a blockage. This could result in personal injury or damage to the equipment. If backflushing is absolutely necessary, **liquid pressure** must be limited to 50% of the maximum permissible operating pressure shown on the pump performance curve. (See Section E, Page 1). If the pump is fitted with a Gorman-Rupp double grease lubricated seal, the maximum incoming pressure must be reduced to 10 p.s.i..

Pump Vacuum Check

With the pump inoperative, install a vacuum gauge in the system, using pipe dope on the threads. Block the suction line and start the pump. At operating speed the pump should pull a vacuum of 20 inches or more of mercury. If it does not, check for air leaks in the seal, gasket, or discharge valve.

Open the suction line, and read the vacuum gauge with the pump primed and at operating speed. Shut off the pump. The vacuum gauge reading will immediately drop proportionate to static suction lift, and should then stabilize. If the vacuum reading falls off rapidly after stabilization, an air leak exists. Before checking for the source of the leak, check the point of installation of the vacuum gauge.

STOPPING

Never halt the flow of liquid suddenly. If the liquid being pumped is stopped abruptly, damaging shock waves can be transmitted to the pump and piping system. Close all connecting valves slowly. On engine driven pumps, reduce the throttle speed slowly and allow the engine to idle briefly before stopping.

CAUTION

If application involves a high discharge head, gradually close the discharge throttling valve before stopping the pump.

After stopping the pump, disconnect the spark plug wire or take other action to ensure that the pump will remain inoperative.

Cold Weather Preservation

In below freezing conditions, drain the pump to prevent damage from freezing. Also, clean out any solids by flushing with a hose. Operate the pump for approximately one minute; this will remove any remaining liquid that could freeze the pump rotating parts.

If the pump will be idle for more than a few hours, or if it has been pumping liquids containing a large amount of solids, drain the pump, and flush it thoroughly with clean water. To prevent large solids from clogging the drain port and preventing the pump from completely draining, insert a rod or stiff wire in the drain port, and agitate the liquid during the draining process. Clean out any remaining solids by flushing with a hose.

PUMP TROUBLESHOOTING - SECTION D

WARNING

Before attempting to open or service the pump:

1. Familiarize yourself with this manual.
2. Disconnect the spark plug wire or take other action to ensure that the pump will remain inoperative.
3. Allow the pump to cool if overheated.
4. Vent the pump slowly and cautiously.
5. Close the suction and discharge valves.
6. Check the temperature before opening any covers, plates, or plugs.
7. Drain the pump.

TROUBLE	POSSIBLE CAUSE	PROBABLE REMEDY
PUMP FAILS TO PRIME	Not enough liquid in casing.	Add liquid to casing. See PRIMING.
	Suction check valve contaminated or damaged.	Clean or replace check valve.
	Air leak in suction line.	Correct leak.
	Lining of suction hose collapsed.	Replace suction hose.
	Suction check valve or foot valve clogged or binding.	Clean valve.
	Leaking or worn seal or pump gasket.	Check pump vacuum. Replace leaking or worn seal or gasket.
	Pump speed too slow.	Check engine output; consult engine operation manual.
	Discharge head too high.	Install bypass line.
	Suction lift too high.	Measure lift w/vacuum gauge. Reduce lift and/or friction losses in suction line.
	Strainer clogged.	Check strainer and clean if necessary.

TROUBLE	POSSIBLE CAUSE	PROBABLE REMEDY
PUMP STOPS OR FAILS TO DELIVER RATED FLOW OR PRESSURE.	Air leak in suction line.	Correct leak.
	Suction intake not submerged at proper level or sump too small.	Check installation and correct submergence as needed.
	Lining of suction hose collapsed.	Replace suction hose.
	Impeller or other wearing parts worn or damaged.	Replace worn or damaged parts. Check that impeller is properly centered and rotates freely.
	Impeller clogged.	Free impeller of debris.
	Pump speed too slow.	Check engine output; consult engine operation manual.
	Discharge head too high.	Install bypass line.
	Suction lift too high.	Measure lift w/vacuum gauge. Reduce lift and/or friction losses in suction line.
	Leaking or worn seal or pump gasket.	Check pump vacuum. Replace leaking or worn seal or gasket.
PUMP REQUIRES TOO MUCH POWER	Pump speed too high.	Check engine output.
	Discharge head too low.	Adjust discharge valve.
	Liquid solution too thick.	Dilute if possible.
PUMP CLOGS FREQUENTLY	Discharge flow too slow.	Open discharge valve fully to increase flow rate, and run engine at maximum governed speed.
	Suction check valve or foot valve clogged or binding.	Clean valve.

TROUBLE	POSSIBLE CAUSE	PROBABLE REMEDY
EXCESSIVE NOISE	Cavitation in pump.	Reduce suction lift and/or friction losses in suction line. Record vacuum and pressure gauge readings and consult local representative or factory.
	Pumping entrained air.	Locate and eliminate source of air bubble.
	Pump or drive not securely mounted.	Secure mounting hardware.
	Impeller clogged or damaged.	Clean out debris; replace damaged parts.

PUMP MAINTENANCE AND REPAIR - SECTION E

MAINTENANCE AND REPAIR OF THE WEARING PARTS OF THE PUMP WILL MAINTAIN PEAK OPERATING PERFORMANCE.

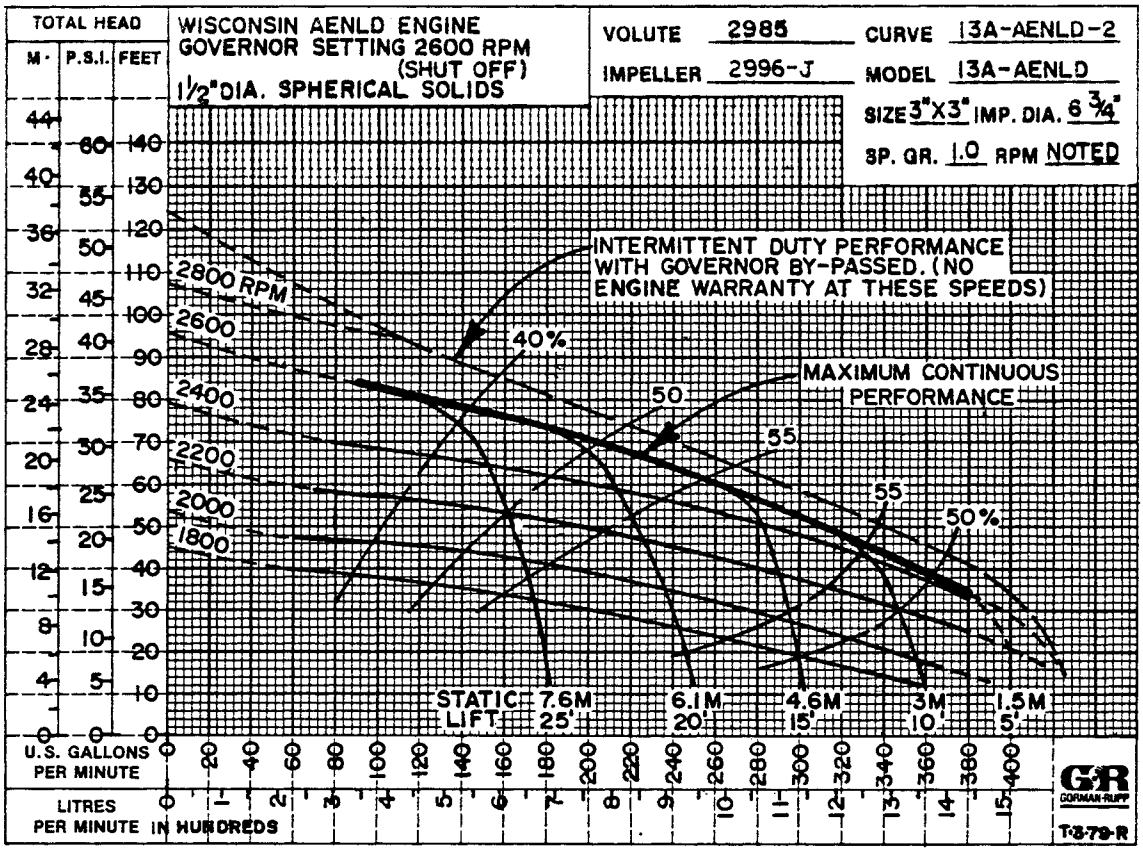

*STANDARD PERFORMANCE FOR PUMP MODEL 13A2-AENLD

*Based on 70°F clear water at sea level with minimum suction lift. Since pump installations are seldom identical, your performance may be different due to such factors as viscosity, specific gravity, elevation, temperature, and impeller trim.

If your pump serial number is followed by an "N", your pump is NOT a standard production model. Contact the Gorman-Rupp Company to verify performance or part numbers.

SECTIONAL DRAWING

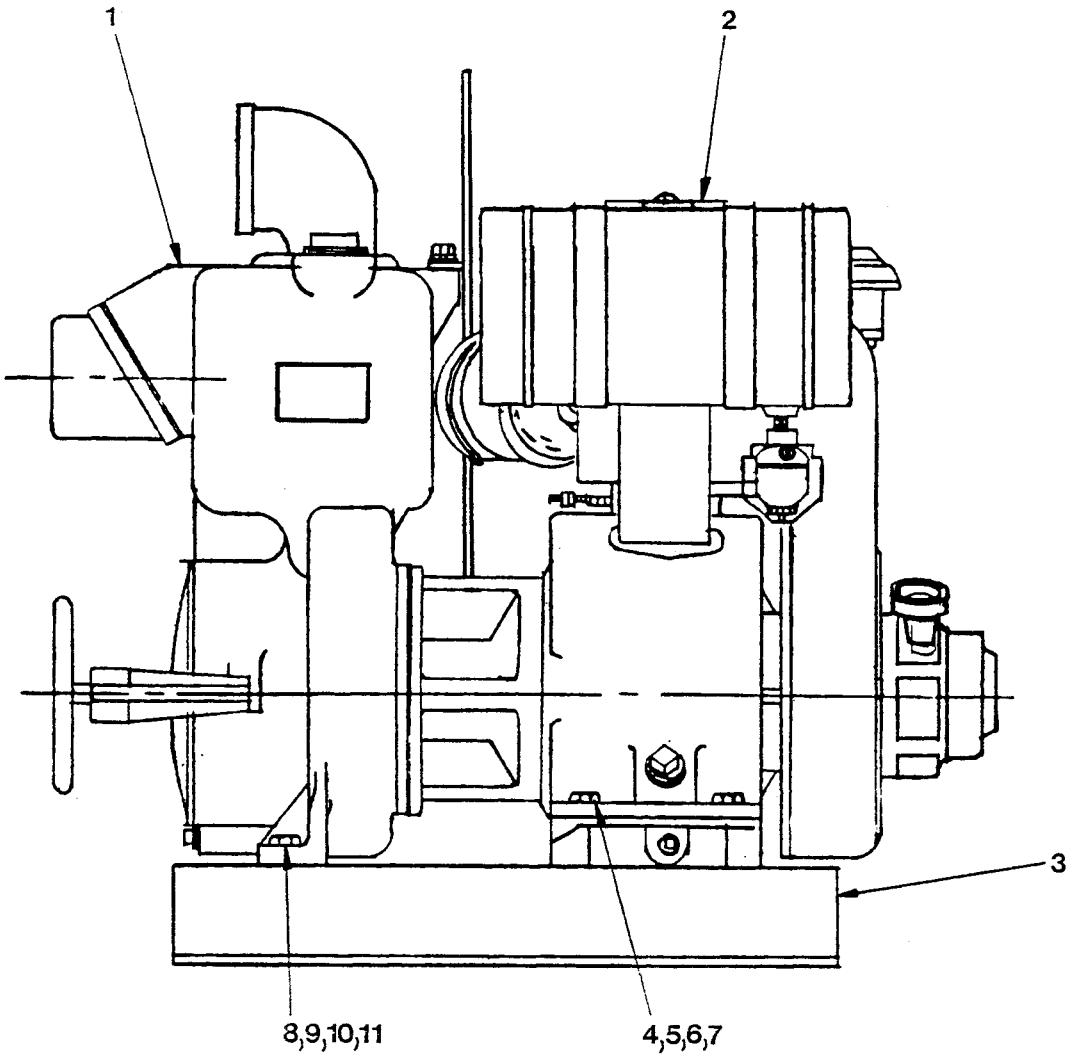

Figure 1. Pump Model 13A2-AENLD

PARTS LIST
Pump Model 13A2-AENLD
(From S/N 701566 up)

If your pump serial number is followed by an "N", your pump is **NOT** a standard production model. Contact the Gorman-Rupp Company to verify part numbers.

ITEM NO.	PART NAME	PART NUMBER	MATL CODE	QTY
1	PUMP END ASSY	13A2-(AENLD)	(FIGURE 2)	1
2	WISCONSIN AENLD ENGINE	202-C1	-----	1
3	BASE	5513	24000	1
4	HEX HD CAPSCREW	B0611	15991	4
5	FLAT WASHER	K06	15991	4
6	LOCKWASHER	J06	15991	4
7	HEX NUT	D06	15991	4
8	HEX HD CAPSCREW	B0606	15991	2
9	FLAT WASHER	K06	15991	2
10	LOCKWASHER	J06	15991	2
11	HEX NUT	D06	15991	2
NOT SHOWN:				
	WARNING DECAL	2613-FE	-----	1
	STRAINER	4917	24001	1
OPTIONAL:				
	WHEEL KIT	GRP30-3	-----	1

*INDICATES PARTS RECOMMENDED FOR STOCK

Above Serial Numbers Do Not Apply To Pumps Made In Canada.

CANADIAN SERIAL NO. ..... AND UP

SECTIONAL DRAWING

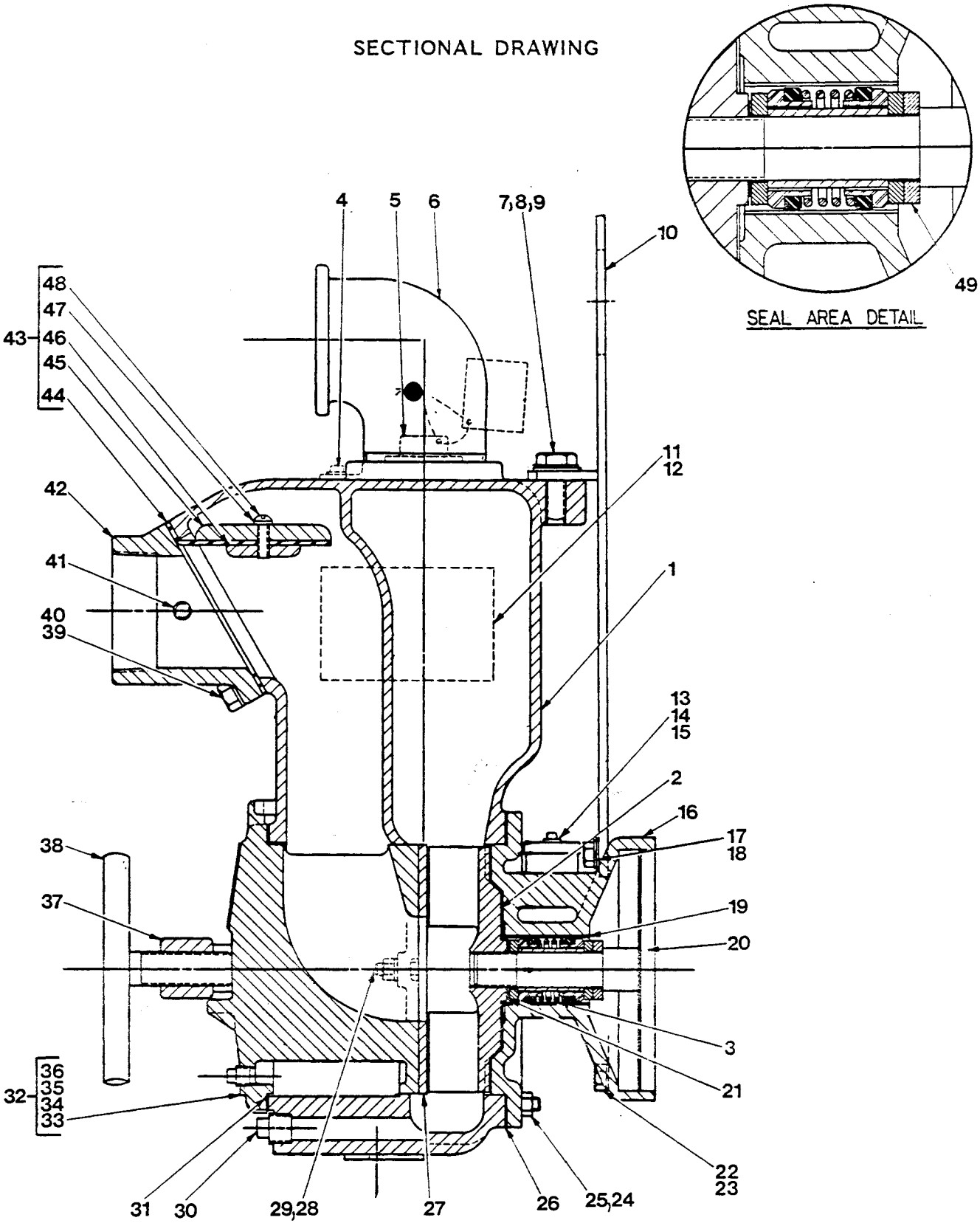

Figure 2. Pump End Assembly 13A2-(AENLD)

PARTS LIST
Pump End Assembly 13A2-(AENLD)

ITEM NO.	PART NAME	PART NUMBER	MATL CODE	QTY
1	PUMP CASING	2985	10010	1
2	*IMPELLER	2996-J	11000	1
3	*SEAL ASSY	GS1000	-----	1
4	ACCESSORY PLUG	P04	11990	1
5	FILL PLUG ASSY	48271-069	-----	1
6	DISCHARGE ELBOW	RS48	11990	1
7	HEX HD CAPSCREW	B1003	15991	1
8	FLAT WASHER	K10	15991	1
9	LOCKWASHER	J10	15991	1
10	HOIST BAIL ASSY	44711-011	24150	1
11	NAME PLATE	38818-023	13990	1
12	DRIVE SCREW	BM#04-03	15990	4
13	GREASE CUP	S36	-----	1
14	PIPE NIPPLE	T0408	15070	1
15	PIPE COUPLING	AE04	11990	1
16	INTERMEDIATE	5-B	10010	1
17	HEX HD CAPSCREW	B0709	15991	2
18	FLAT WASHER	K07	15991	2
19	*SEAL LINER	83	14080	REF
20	ENGINE SHAFT	NOT AVAILABLE		REF
21	*IMPELLER SHIM SET	2-X	17090	REF
22	HEX HD CAPSCREW	B0708	15991	2
23	LOCKWASHER	J07	15991	4
24	CASING STUD	C0606	15991	8
25	HEX NUT	D06	15991	8
26	*CASING GASKET SET	3-G	18000	1
27	*WEAR PLATE ASSY	2634-A	15990	1
28	HEX NUT	D06	15991	2
29	LOCKWASHER	J06	15991	2
30	CASING DRAIN PLUG	P08	11990	1
31	*BACK COVER GSKT	2985-G	19090	1
32	BACK COVER ASSY	42111-921	-----	1
33	-BACK COVER	NOT AVAILABLE		1
34	-WARNING PLATE	2613-EV	13990	1
35	-DRIVE SCREW	BM#04-03	15990	4
36	-CVR DRAIN PLUG	P04	11990	1
37	COVER CLAMP BAR	2987	11000	1
38	CLAMP BAR SCREW	2536	24000	1
39	HEX HD CAPSCREW	B0805	15991	4
40	LOCKWASHER	J08	15991	4
41	PIPE PLUG	P04	11990	1
42	SUCTION FLANGE	2943	10010	1
43	CHECK VALVE ASSY	1348	-----	1
44	* -CHECK VLV GSKT	1348-G	19070	1
45	-LRG VLV WEIGHT	18-B	10010	1
46	-SML VLV WEIGHT	2944	10010	1
47	-LOCKWASHER	J05	17090	1
48	-RD HD MACH SCRW	X0504	17090	1
49	SEAL RING	2-A	15020	REF
NOT SHOWN:				
	SUCTION STICKER	6588-AG	00000	1
	DISCHARGE STICKER	6588-BJ	00000	1

*INDICATES PARTS RECOMMENDED FOR STOCK

PUMP AND SEAL DISASSEMBLY AND REASSEMBLY

This pump requires little service due to its rugged; minimum-maintenance design. However, if it becomes necessary to inspect or replace the wearing parts, follow these instructions which are keyed to the sectional views (see Figures 1 and 2) and the accompanying parts lists.

Before attempting to service the pump, remove the suction and discharge hoses and disconnect the spark plug wire to ensure that the engine will remain inoperative.

For service information on the engine, consult the literature supplied with the engine or contact your local Wisconsin engine representative.

WARNING

Before attempting to open or service the pump:

1. Familiarize yourself with this manual.
2. Disconnect the spark plug wire or take other action to ensure that the pump will remain inoperative.
3. Allow the pump to cool if overheated.
4. Vent the pump slowly and cautiously.
5. Close the suction and discharge valves.
6. Check the temperature before opening any covers, plates, or plugs.
7. Drain the pump.

Suction Check Valve Removal And Disassembly

(Figure 2)

Before attempting to service the pump, remove the back cover and casing drain plugs (30 and 36) and drain the pump. Clean and reinstall the drain plugs.

Remove the hardware (39 and 40) and separate the suction flange (42) and check valve assembly (43) from the pump casing (1). Inspect the check valve parts and replace as required. To disassemble the check valve assembly, remove the hardware (47 and 48) and separate the valve weights (45 and 46) and check valve gasket (44).

Back Cover Removal

(Figure 2)

The wear plate is easily accessible and may be serviced by removing the back cover assembly (32). Loosen the clamp bar screw (38) and remove the clamp bar (37). Pull the back cover and wear plate from the pump casing. Remove the back cover gasket (31).

Inspect the wear plate (27) and replace it if badly scored or worn. To remove the wear plate, disengage the hardware (28 and 29) securing it to the back cover.

Pump Disassembly

(Figure 1)

Remove the hardware (8, 9, 10 and 11) securing the pump casing to the base (3).

(Figure 2)

Remove the hardware (7, 8 and 9) securing the pump casing (1) to the hoist bail assembly (10). Remove the nuts (25) and slide the casing off the intermediate (16). Remove the gasket set (26) from the casing studs. Tie and tag the gasket set for ease of reassembly.

Before attempting to remove the impeller (2), turn the cross arm on the automatic lubricating grease cup (13) clockwise until it rests against the cover (see Figure 4). This will prevent the grease in the cup from escaping when the impeller is removed.

To remove the impeller, tap the vanes with a soft-faced mallet or block of wood in a counterclockwise direction (when facing the impeller). **Be careful** not to damage the impeller vanes. Use caution when unscrewing the impeller from the shaft; tension on the seal spring will be released as the impeller is removed.

Remove the impeller adjusting shims (21). Tie and tag the shims for ease of reassembly.

Seal Removal

(Figure 2)

Carefully remove the outboard stationary and rotating seal elements, packing ring, stationary washer, seal spring and spacer sleeve from the intermediate. Use a stiff wire with a hooked end to remove the inboard stationary washer, packing ring, stationary and rotating seal elements, and seal ring (49).

Inspect the seal liner (19) for wear or grooves that could cause leakage or damage to the seal packing rings. The seal liner is a press fit in the intermediate (16) and does not normally require replacement. If replacement is required, the intermediate must be separated from the engine (see **Seal Installation**).

If no further disassembly is required, see **Seal Installation**.

Seal Installation

(Figures 2 and 3)

Clean the seal cavity and shaft with a cloth soaked in fresh cleaning solvent.

WARNING

Most cleaning solvents are toxic and flammable. Use them only in a well-ventilated area free from excessive heat, sparks, and flame. Read and follow all precautions printed on solvent containers.

The seal is not normally reused because wear patterns on the finished faces cannot be realigned during reassembly. This could result in premature failure. If necessary to reuse an old seal in an emergency, **carefully** wash all metallic parts in fresh cleaning solvent and allow to dry thoroughly.

Handle the seal parts with extreme care to prevent damage. Be careful not to contaminate precision finished faces; even fingerprints on the faces can shorten seal life. If necessary, clean the faces with a non-oil based solvent and a clean lint free tissue. Wipe **lightly** in a concentric pattern to avoid scratching the faces.

Inspect the seal components for wear, scoring, grooves, and other damage that might cause leakage. Clean and polish the seal spacer sleeve, or replace it if there are nicks or cuts on either end. If any components are worn, replace the complete seal; **never mix old and new seal parts**.

If a replacement seal is being used, remove it from the container and inspect the precision finished faces to ensure that they are free of any foreign matter.

To ease installation of the seal, lubricate the packing rings and seal liner (19) with water or a very **small** amount of oil, and apply a drop of light lubricating oil on the finished faces. Assemble the seal as follows, (see Figure 3).

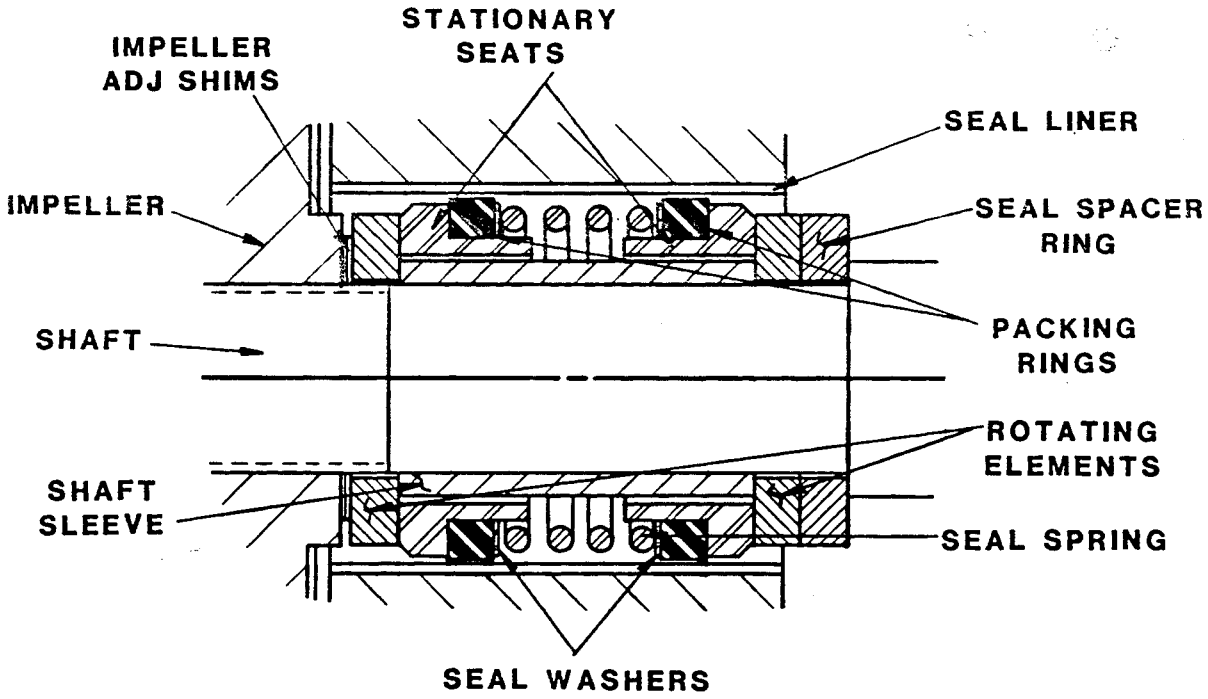

Figure 3. GS1000 Seal Assembly

CAUTION

This seal is not designed for operation at temperatures above 110°F. Do not use at higher operating temperatures.

Before installing the seal, inspect the bore of the seal liner (19) for wear or grooves that might cause leakage or damage to the seal packing rings. If the seal liner must be replaced, remove the grease cup and piping (13, 14, and 15), and disengage the hardware (17, 18, 22 and 23) securing the hoisting bail and intermediate to the engine.

Position the intermediate on the bed of an arbor (or hydraulic) press and use a new sleeve to force the old one out. After a new liner is properly installed, a 1/4 inch diameter hole must be drilled through it to permit the flow of lubricant to the seal assembly. **Be careful** to center the drill in the threaded grease pipe hole and not damage the threads. Deburr the hole from the inside of the seal liner after drilling.

Secure the intermediate (16) and hoisting bail (10) to the engine with the hardware (17, 18, 22 and 23), and reinstall the grease cup and piping (13, 14 and 15).

Slide the seal ring (49) onto the shaft until it seats squarely against the shaft shoulder.

Slide the inboard rotating element onto the shaft with the chamfered side toward the seal ring. Subassemble the inboard stationary seat, packing ring and stationary washer. Press this subassembly into the lubricated seal liner. A push tube cut from a length of plastic pipe would aid this installation. The O.D. of the pipe should be approximately the same diameter as the O.D. of the seal spring.

Slide the spacer sleeve onto the shaft until it seats against the inboard rotating element, and install the seal spring. Subassemble the outboard stationary seat, packing ring and stationary washer. Press this subassembly into the lubricated seal liner.

Install the outboard rotating element with the chamfered side toward the inside of the intermediate.

Lubricate the seal assembly as indicated in **LUBRICATION** after the impeller has been installed.

Pump Reassembly

(Figure 2)

Inspect the impeller, and replace it if cracked or badly eroded.

Install the same thickness of impeller adjusting shims (21) as previously removed, and screw the impeller onto the shaft until tight. A clearance of .020 to .040 inch between the impeller and the intermediate is necessary for maximum pump efficiency. Measure this clearance, and add or subtract impeller shims until it is reached.

NOTE

> If the pump has been completely disassembled, it is recommended that the back cover assembly be reinstalled at this point. The back cover assembly must be in place to adjust the impeller face clearance.

A clearance of .008 - .015 inch between the impeller and the wear plate is also recommended for maximum pump efficiency. This clearance can be obtained by removing an equal amount of gaskets from the casing gasket set (26) until the impeller binds against the wear plate when the shaft is turned. After the impeller binds, add one of the thinner gaskets to the gasket set and secure the casing to the intermediate with the nuts (25).

Reinstall the hardware (7, 8 and 9) securing the hoisting bail (10) to the pump casing.

(Figure 1)

Secure the pump casing to the base (3) with the hardware (8, 9, 10 and 11).

Back Cover Installation

(Figure 2)

If the wear plate (27) was removed for replacement, carefully center it on the back cover and secure it with the hardware (28 and 29). The wear plate must be concentric to prevent binding when the back cover is installed.

Clean any scale or debris from the contacting surfaces in the pump casing that might prevent a good seal with the back cover. Replace the back cover gasket (31) and slide the back cover assembly into the pump casing. Be sure the wear plate does not bind against the impeller.

NOTE

To ease future disassembly, apply a film of grease or 'Never-Seez' on the back cover shoulder, or any surface that contacts the pump casing. This action will reduce rust and scale build-up.

Secure the back cover assembly by installing the clamp bar (37) and tightening the clamp bar screw (38). **Do not** over-tighten the clamp bar screw; it should be just tight enough to seal the back cover shoulder.

Suction Check Valve Reassembly And Installation

(Figure 2)

Assemble the valve weights to each side of the check valve gasket (44) and secure the parts with the hardware (47 and 48).

Position the check valve assembly in the suction port with the large weight (45) toward the impeller and the small weight (46) toward the suction flange (42). Install the suction flange and secure the complete assembly with the hardware (39 and 40).

Check the operation of the suction check valve to ensure proper seating and free movement. Reinstall the suction and discharge piping.

Before starting the pump, check that the piping is secure, fill the casing with liquid, and open all valves in the suction and discharge lines.

LUBRICATION

Seal Assembly

(Figure 2)

Fill the grease cup (13) through the grease fitting with No. 2 lithium base grease until grease escapes from the relief hole. Turn the grease cup arm

counterclockwise until it is at the top of the stem; this will release the spring to apply grease to the seal (see Figure 4).

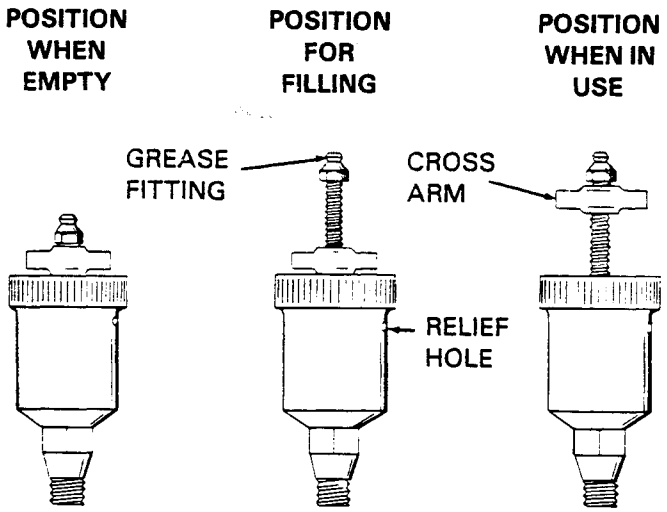

Figure 4. Automatic Lubricating Grease Cup

Engine

Consult the literature supplied with the engine, or contact your local Wisconsin engine representative.

For U.S. and International Warranty Information,
Please Visit www.grpumps.com/warranty
or call:
U.S.: 419—755—1280
International: +1—419—755—1352

For Canadian Warranty Information,
Please Visit www.grcanada.com/warranty
or call:
519—631—2870

THE GORMAN-RUPP COMPANY • MANSFIELD, OHIO
GORMAN-RUPP OF CANADA LIMITED • ST. THOMAS, ONTARIO, CANADA